Experiment No. 2	
UNIVERSAL GATES	
Course Code: CPE 013	**Program:** BSCpE
Course Title: Logic Circuits and Design	**Date Performed:** 12/18/2025
Section: 22S2	**Date Submitted:** 08/1/2026
Members: Bulaong, Ross Andrew	**Instructor:** Engr. Noel Lusung
Florencio, David	
Malabanan, Jasmine	
Que, Josef Leroy	
Zapanta, Russell	

1. Objective:

This activity aims to construct circuits using NAND and NOR gates perform as AND, OR and INVERTER, XOR and XNOR logic gates.

2. Intended Learning Outcomes (ILOs):

The students should be able to:

2.1 Apply universal gates to function as basic logic gates.

2.2 Derive the truth tables of each universal gate.

2.3. Show the output of the simulated circuit using TinkerCAD simulation application.

3. Discussion

Besides NOT gate, many gates perform inversion as a normal part of their function. The simplest inverting gates are NAND gates and NOR gates which are also called as universal gates. .Logic designers frequently use NAND and NOR gates because they are generally faster and use fewer components than AND or OR gates. Any logic function can be implemented using NAND gates or only NOR gates.

The small circle (or bubble) at the gate output of the NAND gate indicates inversion, so the NAND gate is equivalent to an AND gate followed by an inverter. The NAND is also called as AND-NOT gate. The small circle (or bubble) at the gate output of the NOR gate indicates inversion, so the NOR gate is equivalent to an OR gate followed by an inverter. The NAND is also called as OR-NOT gate.

4. Resources:

Materials:

- Personal Computer
- Internet connection

Simulation Tools:

- TinkerCAD
- Logicly

5. Procedure:

Logicly Lab Work:

1) Obtain the logic diagram of the basic logic gates: AND, OR, INVERTER, XOR and XNOR
2) Construct and simulate the function of each equivalent circuits in Logic.ly the equivalent logic diagram of the basic logic gates using minimum number of NAND gates and plot the output in a truth table.
3) Construct and simulate the function of each equivalent circuits in Logic.ly the equivalent logic diagram of the basic logic gates using minimum number of NOR gates and plot the output in a truth table.

TinkerCAD Lab Work:

Simulate the operation of each equivalent circuits in TinkerCAD by connecting the inputs, wires, electronic components, and output correctly following the pin configuration of the IC.

NAND Implementation:

1) Place the 7400 ICs in the digital logic breadboard and connect the diagrams that have drawn in Step 2.
2) Connect +5V and GND pins of each IC to the power and ground of the breadboard.
3) Use the input combinations in Tables 2.1a to 2.1e to get the outputs.
4) Record all observations in "Output Using 7400" column in Table 2.1a to Table 2.1e. Write "0" if it is OFF and "1" if it ON.
5) Under "**REMARKS"** column, put check (√) if the outputs are the same (using 7408 and 7400), otherwise, leave it blank.

NOR Implementation:

1) Place the 7402 ICs in the digital logic breadboard and connect the diagrams that have drawn in Step 3.
2) Connect +5V and GND pins of each IC to the power and ground of the breadboard.
3) Use the input combinations in Tables 2.1d to 2.1e to get the outputs.
4) Record all observations in "Output Using 7400" column in Table 2.2a to Table 2.2e. Write "0" if it is OFF and "1" if it ON.

Under "**REMARKS"** column, put check (√) if the outputs are the same (using 7432 and 7402), otherwise, leave it blank.

Provide a media recording of all your simulations using Screencast-o-Matic or any video/screen recording tools. Make sure that your name or face is visible in the video as proof of your activity.

6. Data and Results:

NOTE: To change inputs, please alter the polarity of the YELLOW wire connected to the source.

1) **USING 7400 IC**

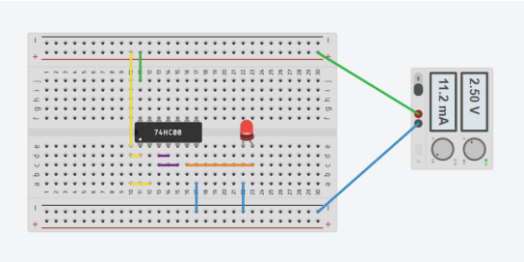

AND Gate Circuit Config (1-1)

Table 2.1a. Truth table of AND gate				
INPUTS		OUTPUT(F) LED DISPLAY		REMARKS
A	B	7408	7400	
0	0	0		LED IS OFF
0	1	0		LED IS OFF
1	0	0		LED IS OFF
1	1	1		LED IS ON

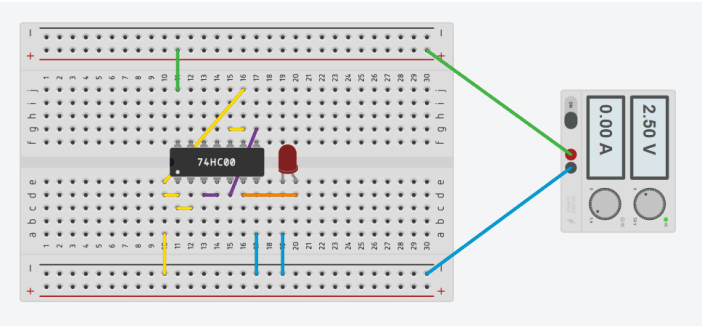

OR Gate Circuit Config (0-0)

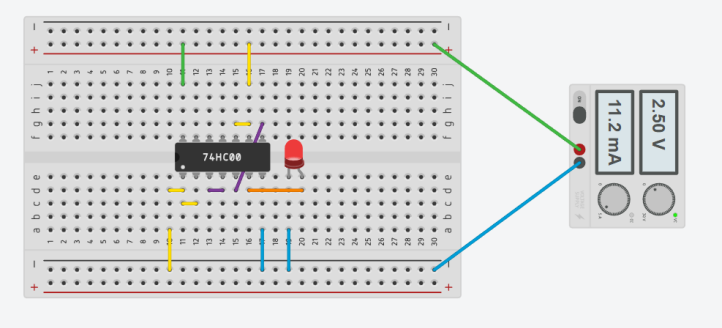

(0-1)

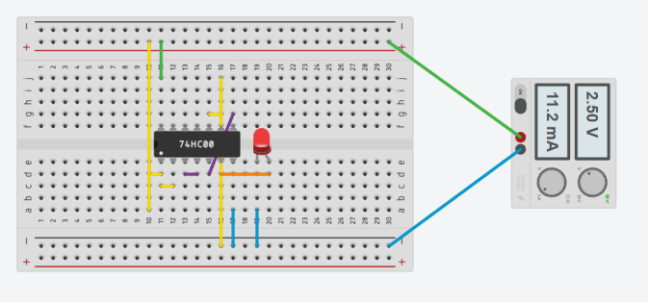

(1-0)

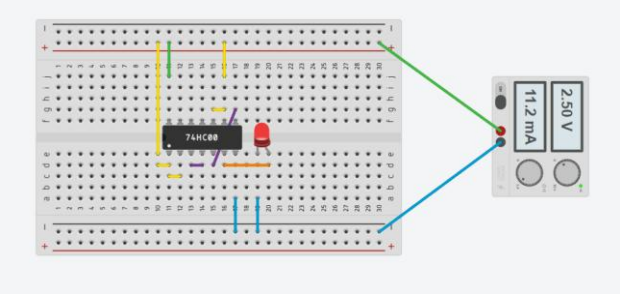

(1-1)

Table 2.1b. Truth table of OR gate				
INPUTS		OUTPUT(F) LED DISPLAY		REMARKS
A	B	7432	7400	
0	0	0	0	OFF
0	1	1	1	ON
1	0	1	1	ON
1	1	1	1	ON

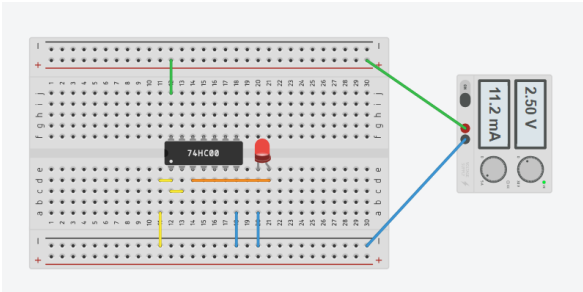

NOT Gate (Inverter) Circuit Config (0)

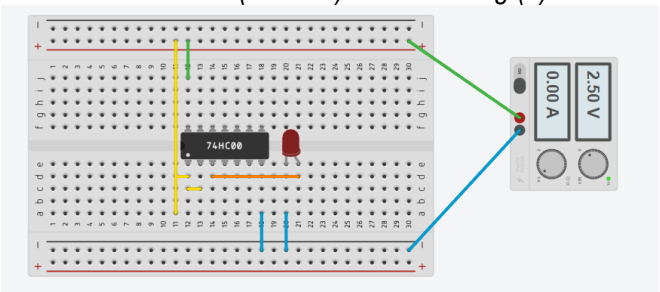

(1)

Table 2.1c. Truth table of INVERTER gate

INPUTS	OUTPUT (F) LED DISPLAY		REMARKS
A	7404	7400	
0	1	1	LED is ON
1	0	0	LED is OFF

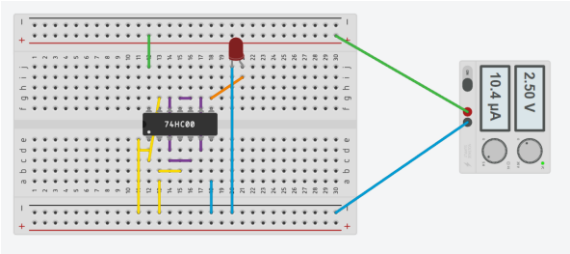

XOR Gate Circuit Config (0-0)

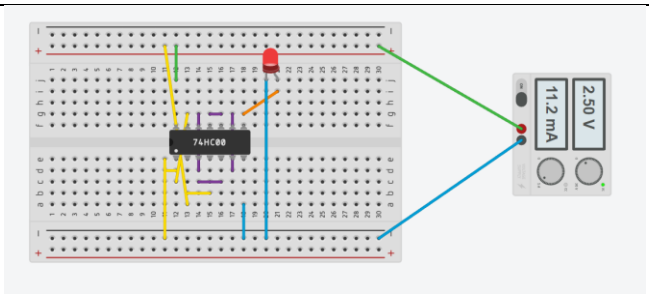

(0-1)

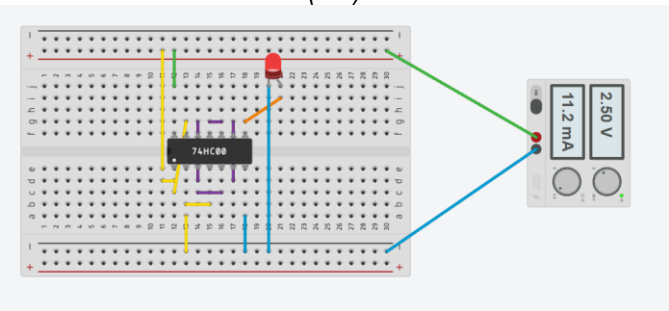

(1-0)

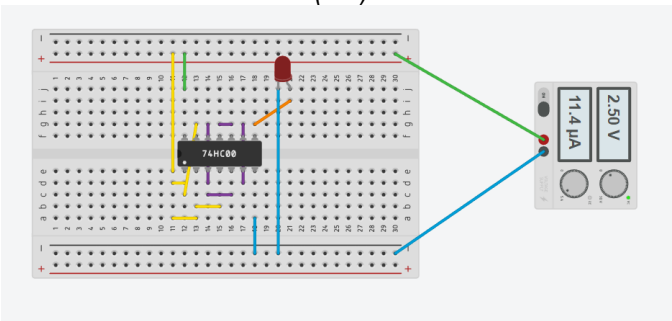

(1-1)

Table 2.1d. Truth table of XOR gate

INPUTS		OUTPUT(F) LED DISPLAY		REMARKS
A	B	7486	7400	
0	0	0	0	
0	1	1	1	
1	0	1	1	
1	1	0	0	

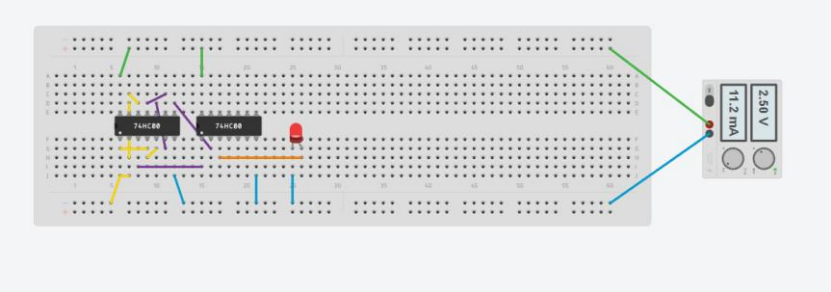

XNOR Gate Circuit Config (0-0)

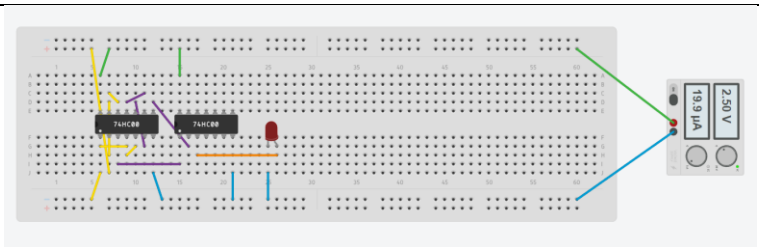

(0-1)

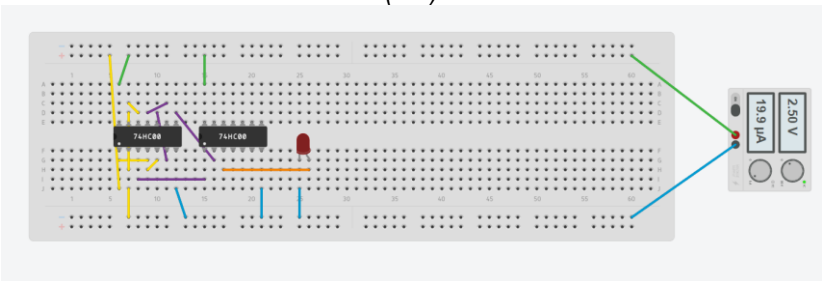

(1-0)

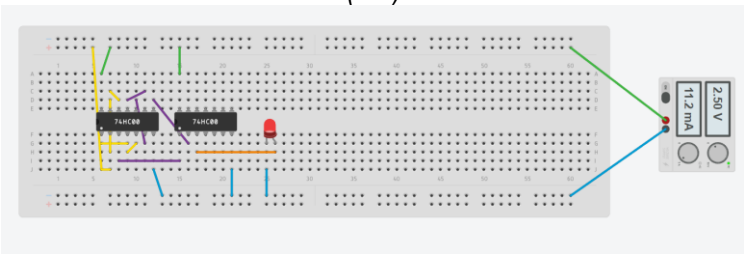

(1-1)

Table 2.1e. Truth table of XNOR gate

INPUTS		OUTPUT(F) LED DISPLAY		REMARKS
A	B	7486 and 7404	7400	
0	0	1	1	ON
0	1	0	0	OFF
1	0	0	0	OFF
1	1	1	1	ON

2) USING 7402 IC

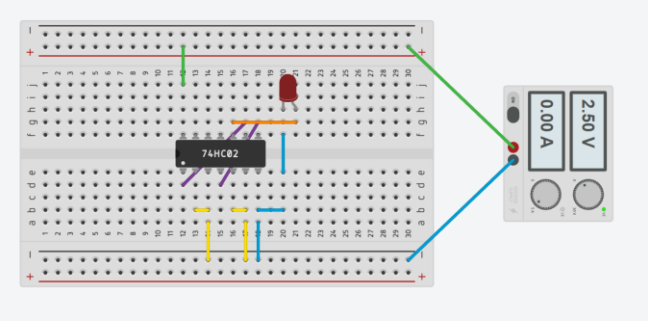

AND Gate Circuit Config (0-0)

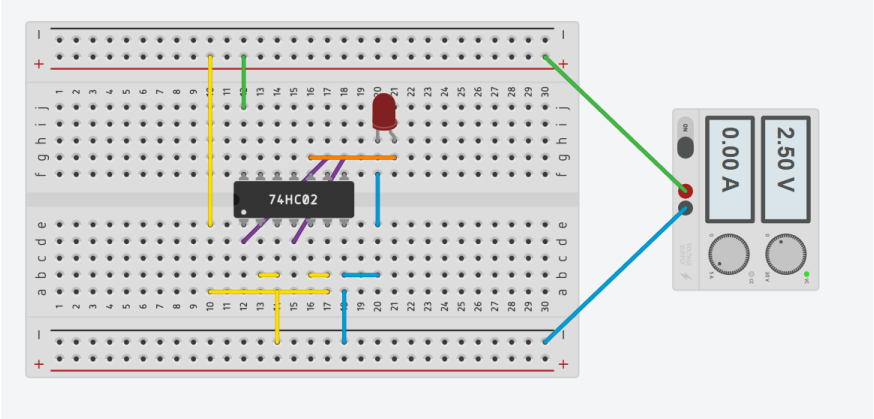

(0-1)

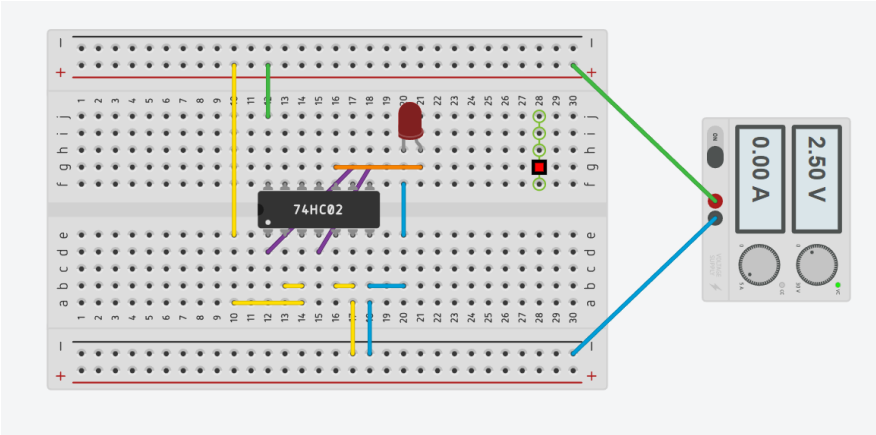

(1-0)

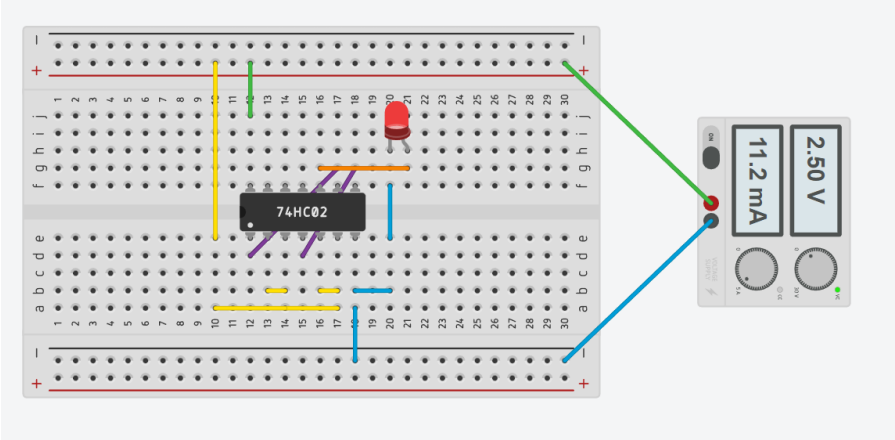

(1-1)

Table 2.2a. Truth table of AND gate

INPUTS		OUTPUT(F) LED DISPLAY		REMARKS
A	B	7408	7402	
0	0	0	0	OFF
0	1	0	0	OFF
1	0	0	0	OFF

1	1	1	1	ON

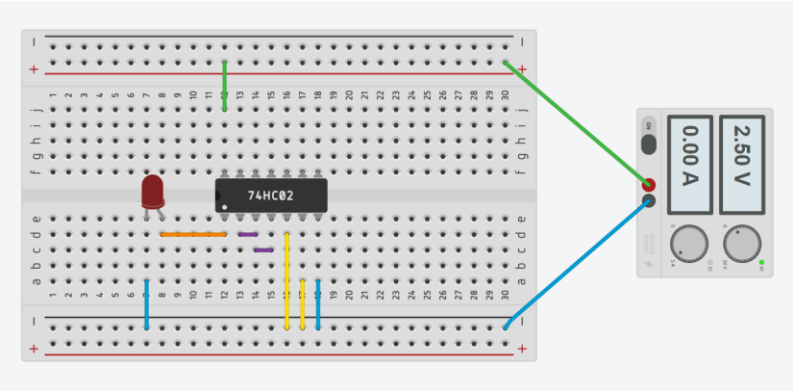

OR Gate Circuit Config (0-0)

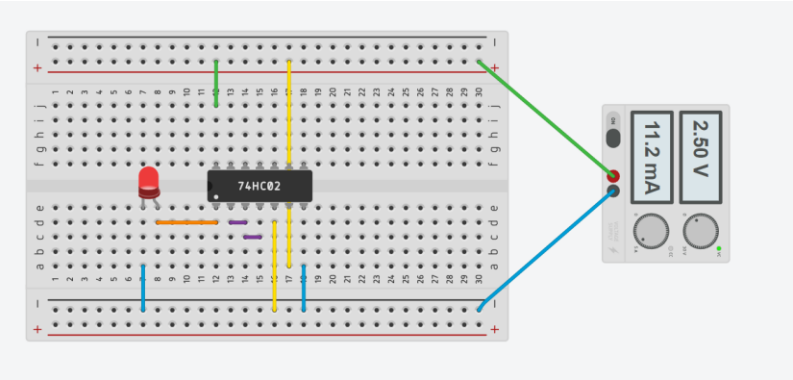

(0-1)

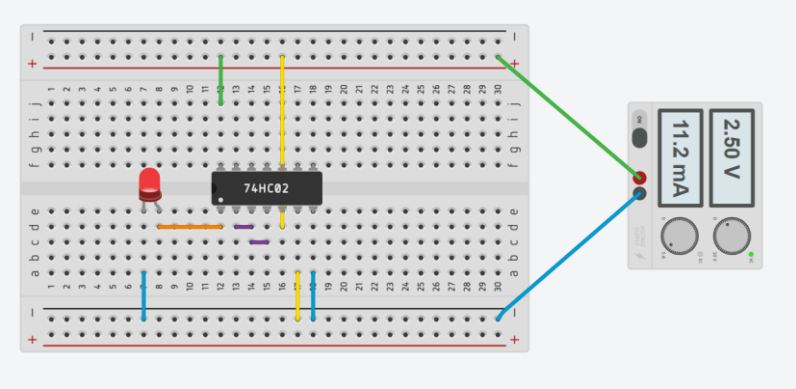

(1-0)

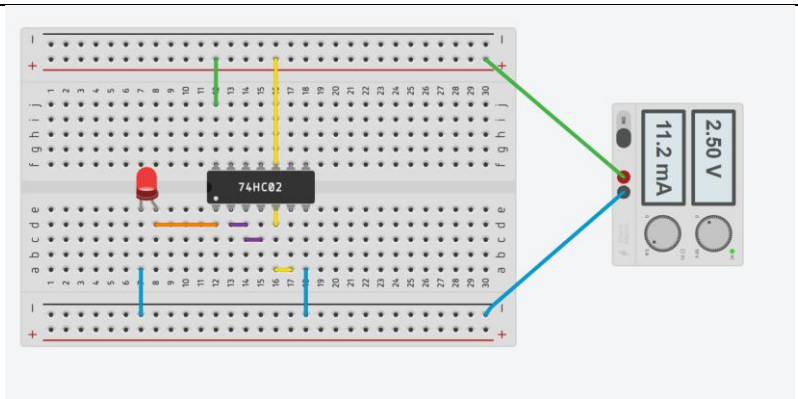

(1-1)

Table 2.2b. Truth table of OR gate

INPUTS		OUTPUT(F) LED DISPLAY		REMARKS
A	B	7432	7402	
0	0	0	0	OFF
0	1	1	1	ON
1	0	1	1	ON
1	1	1	1	ON

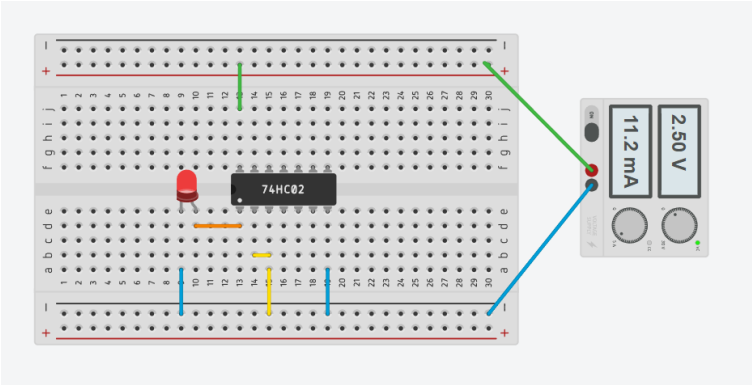

NOT Gate (Inverter) Circuit Config (0)

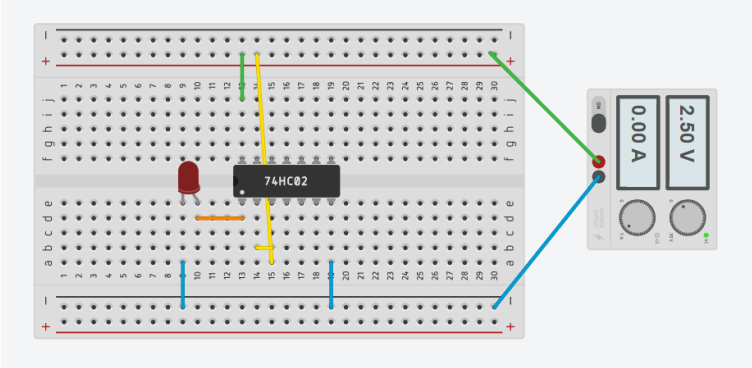

(1)

Table 2.2c. Truth table of INVERTER gate			
INPUTS	OUTPUT (F) LED DISPLAY		REMARKS
A	7404	7402	
0	1	1	LED is ON
1	0	0	LED is OFF

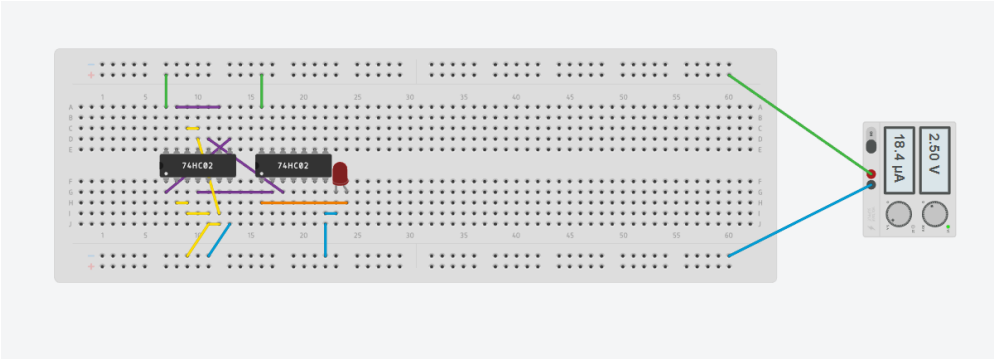

NOR Gate Circuit Config (0-0)

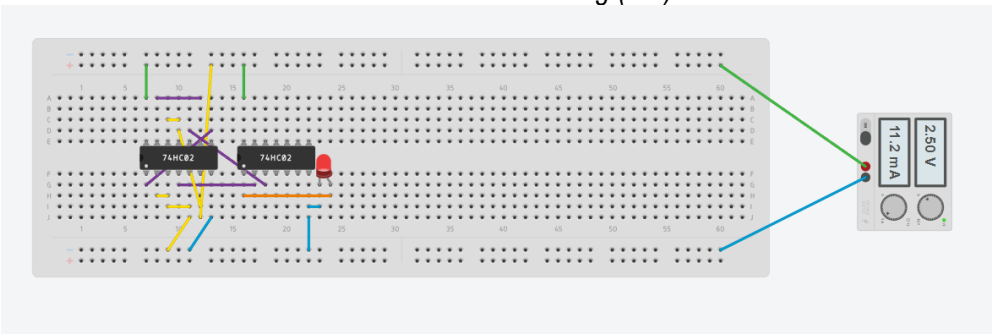

(0-1)

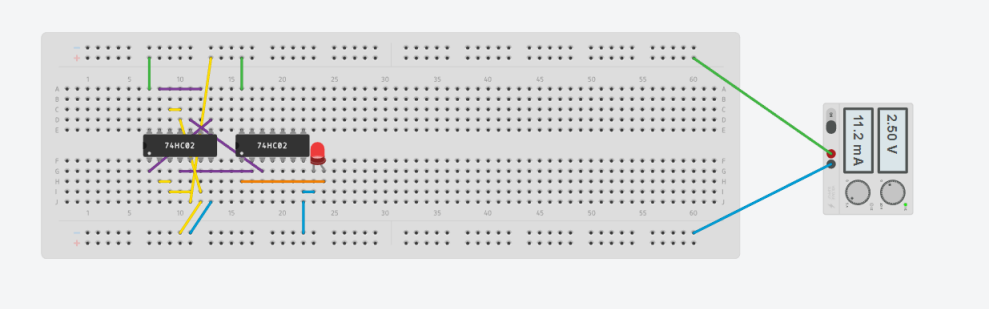

(1-0)

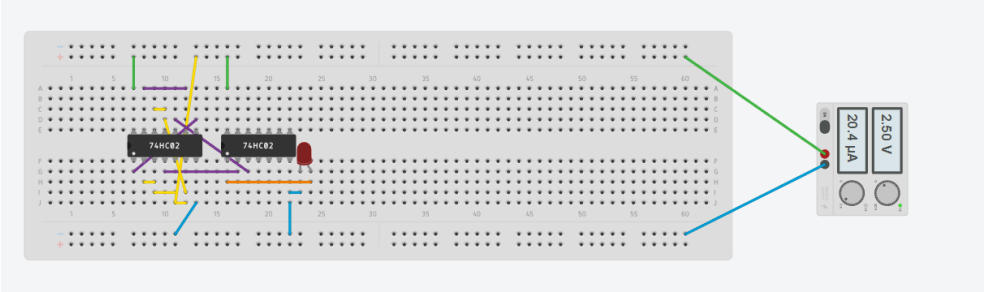

(1-1)

Table 2.2d. Truth table of XOR gate				
INPUTS		OUTPUT(F) LED DISPLAY		REMARKS
A	B	7486	7402	
0	0	0	0	
0	1	1	1	
1	0	1	1	
1	1	0	0	

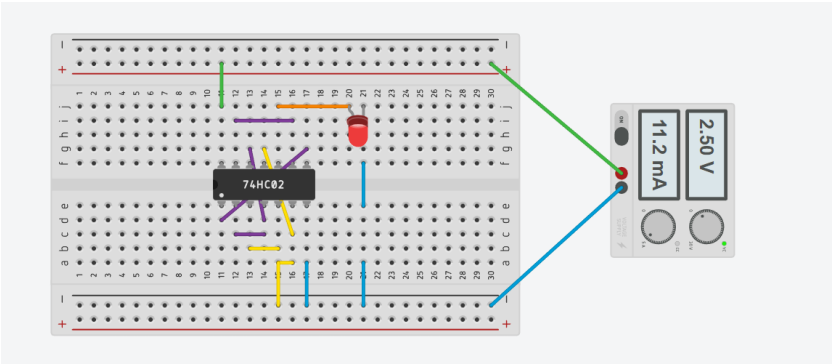

XNOR Gate Circuit Config (0-0)

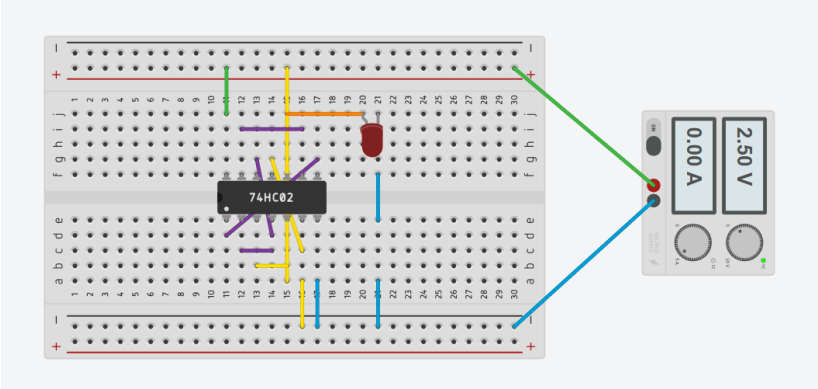

(0-1)

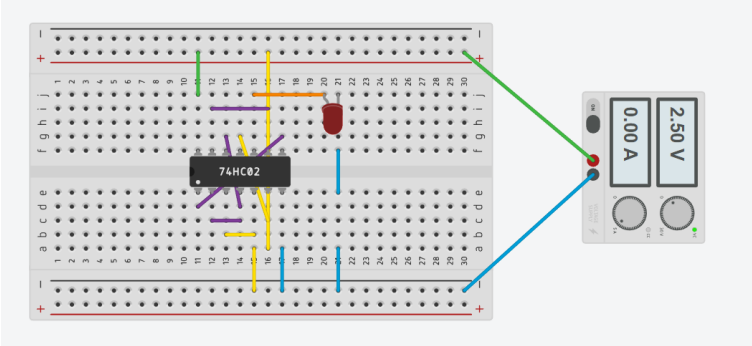

(1-0)

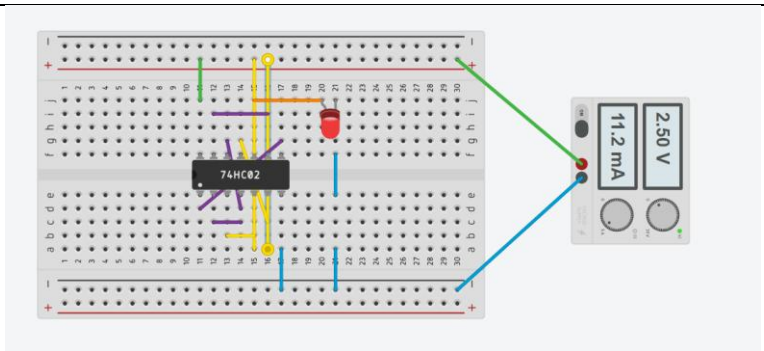

(1-1)

Table 2.2e. Truth table of XNOR gate

INPUTS		OUTPUT(F) LED DISPLAY		REMARKS
A	B	7486 and 7404	7402	
0	0	1	1	ON
0	1	0	0	OFF
1	0	0	0	OFF
1	1	1	1	ON

7. Final Output

Screenshot or print screen of TinkerCAD application different output simulations (5 points deductions for only one output in every required circuit). Also, upload a video of the simulated circuit naming or talking about the shown input combinations. Failure to comply to each instruction will resulted to 5 points deductions. Please include the recorded simulation video in this section and write at least one sentence definition or label for each figure or image.

TINKERCAD LINK: https://www.tinkercad.com/things/iR7YhUy0iCk-universalgatesgr6

GOOGLE DRIVE LINK: https://drive.google.com/file/d/1ss34P5iFIw4p6S4ZvKdXk7I5AGyR0-sK/view?usp=drive_link

8. Questions

1. Compare the output using the NAND or NOR gates converted to an OR or any of the basic logic gates, do they have the same output?

Yes, NAND/NOR converted gates have the same output as normal logic gates. This is because after the manipulation of input values via interconnected NAND/NOR gates, they lead to the same output given by basic logic gates.

2. Differentiate integrated circuits to basic logic gates.

Logic gates are essentially the most basic form of logic, creating different outputs based on input ones and zeroes. Integrated circuits, however, combine many logic gates to manipulate inputs / do specific things. Basically, logic gates are the ones controlling the action (logic) of the integrated circuits, and integrated circuits contain hundreds of thousands of logic gates.

3. Draw the equivalent circuit of the following logic gates using NAND and NOR gates only

Gate	Equivalent circuit using NAND gate only	Equivalent circuit using NOR gate only
Inverter/NOT	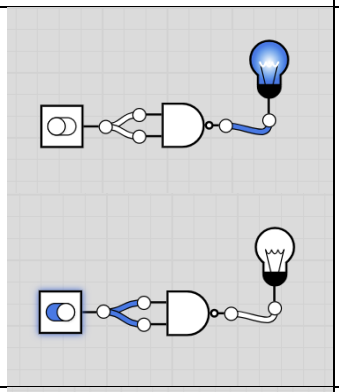	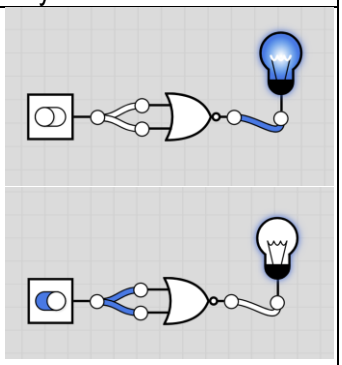
AND	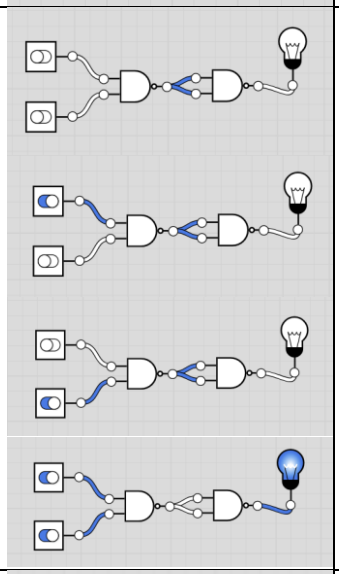	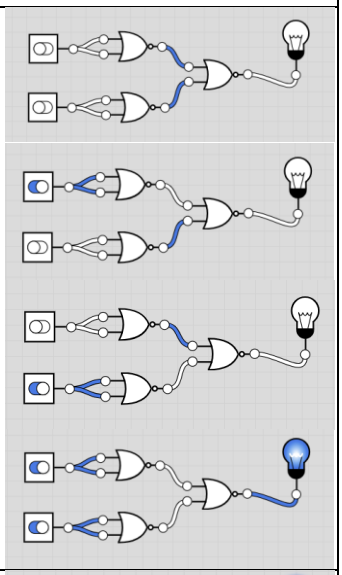
OR	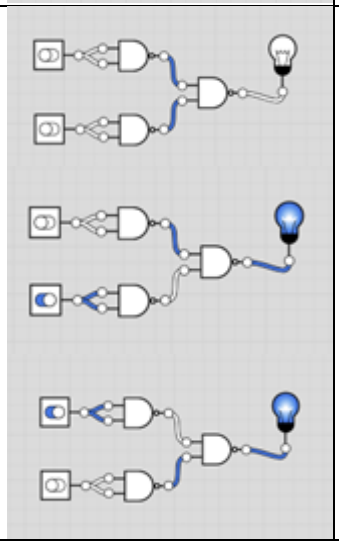	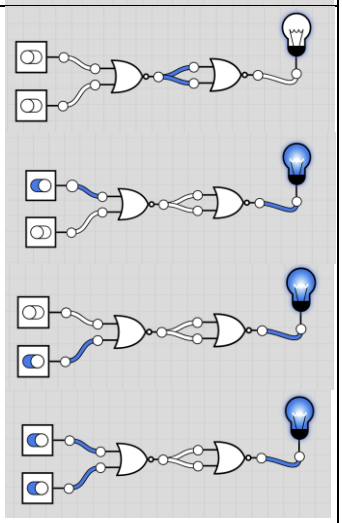

	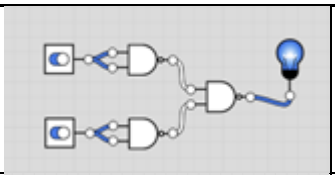	
XOR	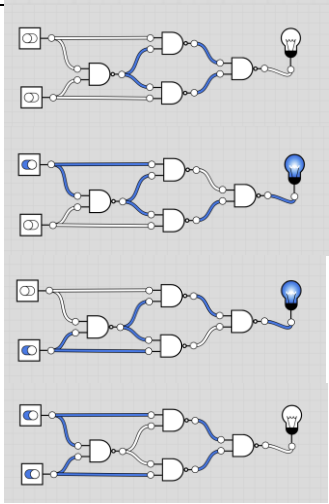	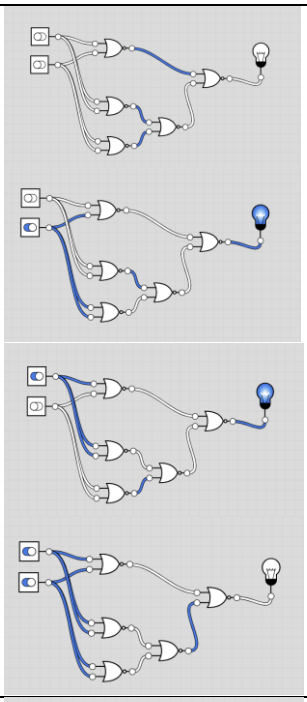
XNOR	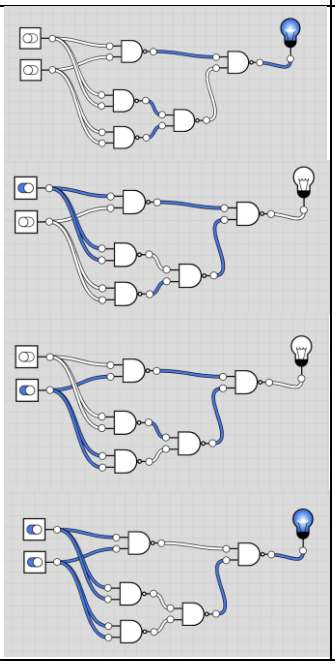	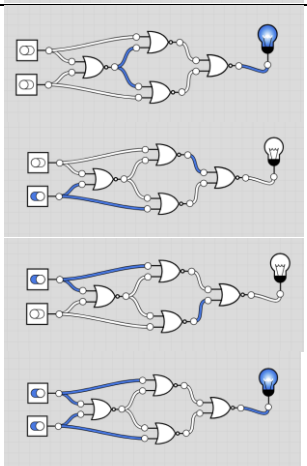

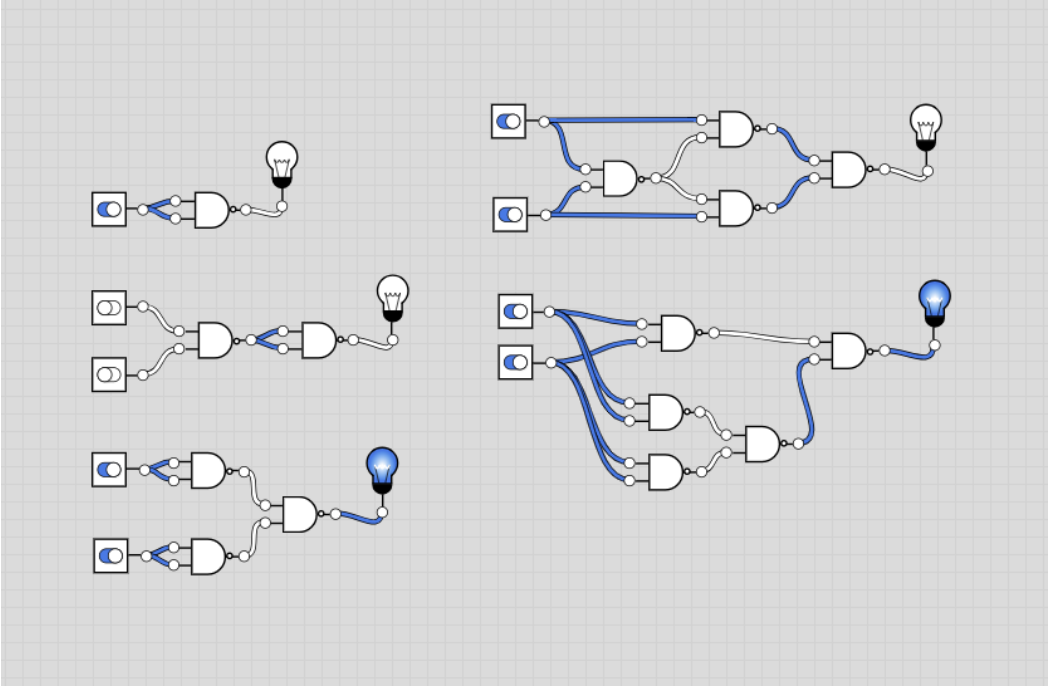

All logic gates built from NAND

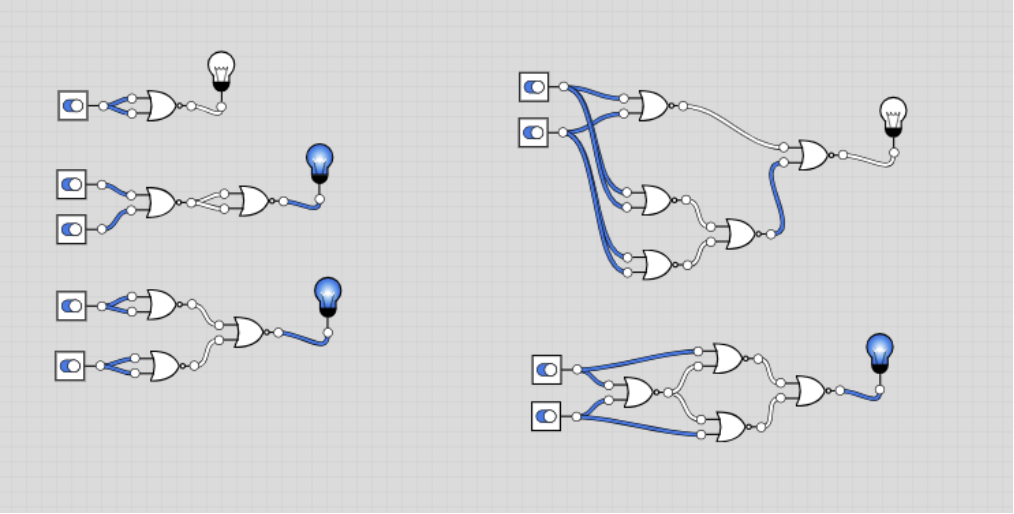

All logic gates built from NOR

9. Assessment (Rubric for Laboratory Performance):

Laboratory Performance Rubric (2)

Criteria	Ratings			Pts
Manipulative Skills	**3 pts** **Proficient** Student always demonstrate needed skills.	**2 pts** **Acceptable** Student occasionally demonstrate needed skills.	**1 pts** **Beginner** Student do not demonstrate needed skills.	3 pts
Experimental Set - up	**3 pts** **Proficient** Student are able to set-up the material with minimum supervision.	**2 pts** **Acceptable** Student are able to set-up the materials with supervision.	**1 pts** **Beginner** Student are unable to set-up the materials.	3 pts
Process Skills	**3 pts** **Proficient** Student always demonstrate targeted process skills.	**2 pts** **Acceptable** Student occasionally demonstrate targeted process skills.	**1 pts** **Beginner** Student do not demonstrate targeted process skills.	3 pts
Application of Technical Writing Skills	**3 pts** **Proficient** Correct spelling, grammar, and sentence construction when writing the Discussion, Observation, and Conclusion are applied in the laboratory report.	**2 pts** **Acceptable** Some minor incorrect spelling, wrong grammar, and wrong sentence construction when writing the Discussion, Observation, and Conclusion are applied in the laboratory report.	**1 pts** **Beginner** Many incorrect spelling, wrong grammar, and wrong sentence construction when writing the Discussion, Observation, and Conclusion are applied in the laboratory report.	3 pts
Time Management / Conduct of Experiment	**3 pts** **Proficient** Student finish ahead of time with complete data and time to revise data.	**2 pts** **Acceptable** Student finish on time with incomplete data.	**1 pts** **Beginner** Student do not finish on time with incomplete data.	3 pts
Complete Requirements of Laboratory Report	**3 pts** **Proficient** Student submitted a complete requirements set by the teacher.	**2 pts** **Acceptable** Student submitted an almost complete Laboratory Report according to requirements set by the teacher.	**1 pts** **Beginner** Student submitted a lot of missing requirements in the Laboratory Report according to requirements set by the teacher.	3 pts
Follow the Correct Format of Laboratory Report	**3 pts** **Proficient** Student submitted a correct format of Laboratory Report according to requirements set by the teacher.	**2 pts** **Acceptable** Student submitted an almost correct format of Laboratory Report according to requirements set by the teacher.	**1 pts** **Beginner** Student did not follow at all the format of Laboratory Report according to requirements set by the teacher.	3 pts
Ability to do independent work	**3 pts** **Proficient** Student do not need to be supervised by the teacher.	**2 pts** **Acceptable** Student require occasional supervision by the teacher.	**1 pts** **Beginner** Student require supervision by the teacher.	3 pts
				Total Points: 24